furniture tables + chairs

muller van severen / robbrecht en daem

valerie objects

valerie objects

valerie_objects is an Antwerp-based design label initiated by Axel Van Den Bossche and art director Veerle Wenes, combining their professional and personal taste for all things good and beautiful.

By allowing designers, architects and artists to translate their signature style into tangible objects, valerie_objects has become a unique collection of everyday items with out-of-the-box aesthetics. These are objects people truly get entangled with.

authentic thinking and creative minds are at the heart of the label

Since 2011, **Muller Van Severen**, the design practice of Fien Muller and Hannes Van Severen, has been on an inspired quest for sculpturally interesting furniture objects – items that are spontaneous and produced with apparent effortlessness. The universe they create together dovetails quite naturally with their work as separate artists. Muller Van Severen is the first artist duo signed with valerie_objects. ___

photo by Mirjam De vriendt

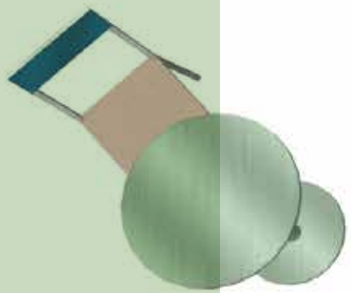

muller van severen

Accentuating the living space by adding a touch of playfulness and color to it, that is the basis of Muller Van Severen's work. Their furniture stands out for its visual lightness and simplicity. With both Fien Muller and Hannes Van Severen being artists, it's natural that the collection sits somewhere between design and art. The design practice has been on an inspired quest for sculpturally interesting furniture objects, without losing track of its functionality. "We create furniture with a certain lightness so the background becomes part of the image", they say.

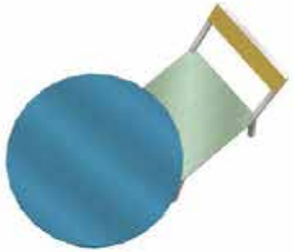

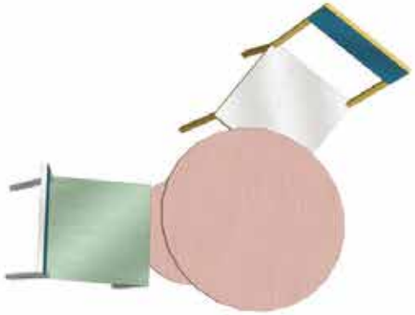

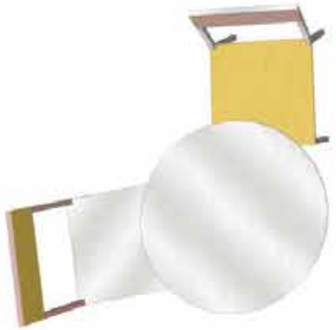

valerie_objects_muller van severen

valerie_objects_wooden table

valerie_objects_wooden table

wooden table

5 different sizes

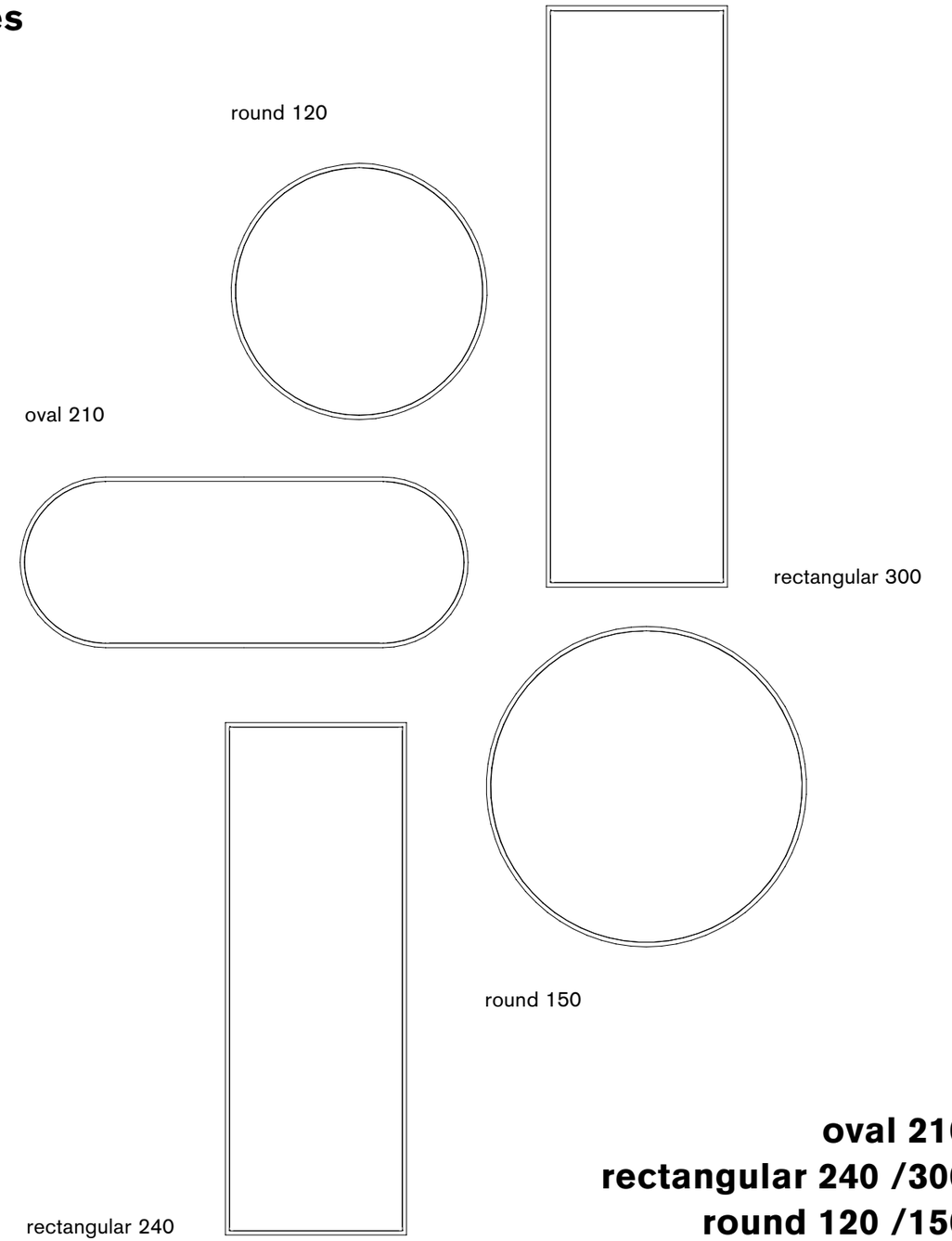

oval 210
rectangular 240 /300
round 120 /150

valerie_objects_wooden table

valerie_objects_wooden table

wooden table
— oak round 120 ivory
— oak oval 210 ivory
— oak rectangular 240 ivory
— cherry round 150 ivory

valerie_objects_wooden table

4 different colours, red ivory black green

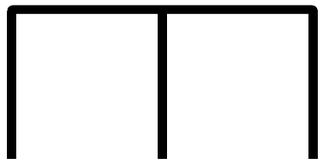

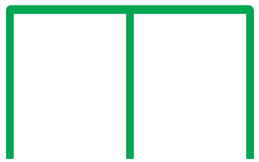

wooden table
— oak rectangular 240 black

wooden table
— cherry round 150 ivory
— oak oval 210 ivory

wooden table
— cherry rectangular 240 black
— cherry round 150 black
— cherry oval 210 black
— cherry round 120 black

wooden table
— oak rectangular 240 green
— birch oval 210 green
— cherry round 120 green

valerie_objects_wooden table

4 different wood types, birch oak cherry walnut

_ an oval, a circle and a rectangle; these are the shapes of a new series of wooden tables we created_muller van severen

wooden table
— birch oval 210 black
— cherry oval 210 green

wooden table
— oak round 120 ivory
— walnut round 120 red

valerie_objects_wooden table

wooden table
— birch round 120 red

wooden table by
muller van severen

wooden table
— birch round 150 ivory
— birch oval 210 black

valerie_objects_wooden table

wooden table
— oak round 150 ivory
— oak oval 210 ivory

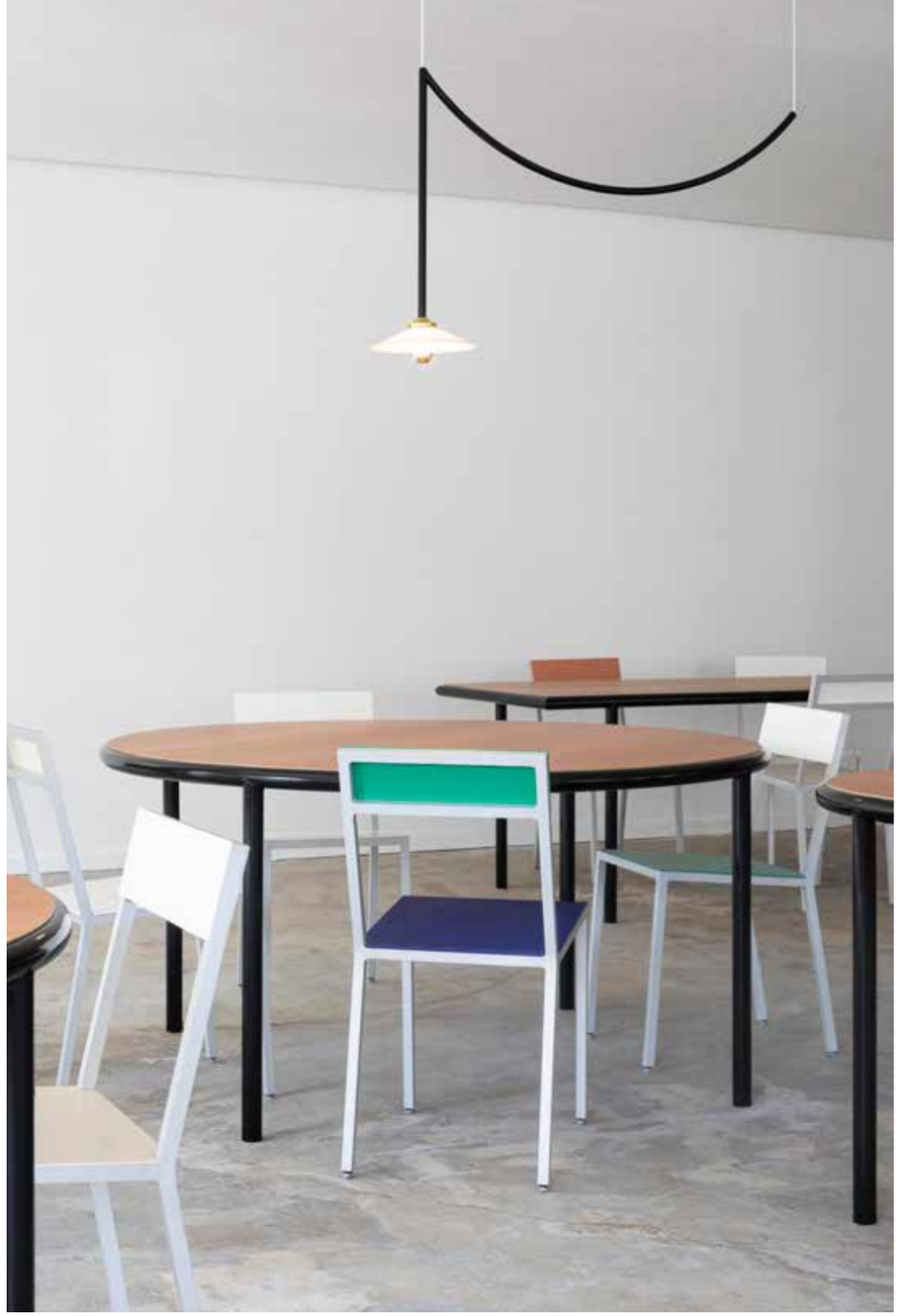

wooden table
— cherry rectangular 240 black
— cherry round 150 black

wooden table
— oak oval 210 green

valerie_objects_wooden table

wooden table
— birch oval 210 ivory
— birch round 120 ivory

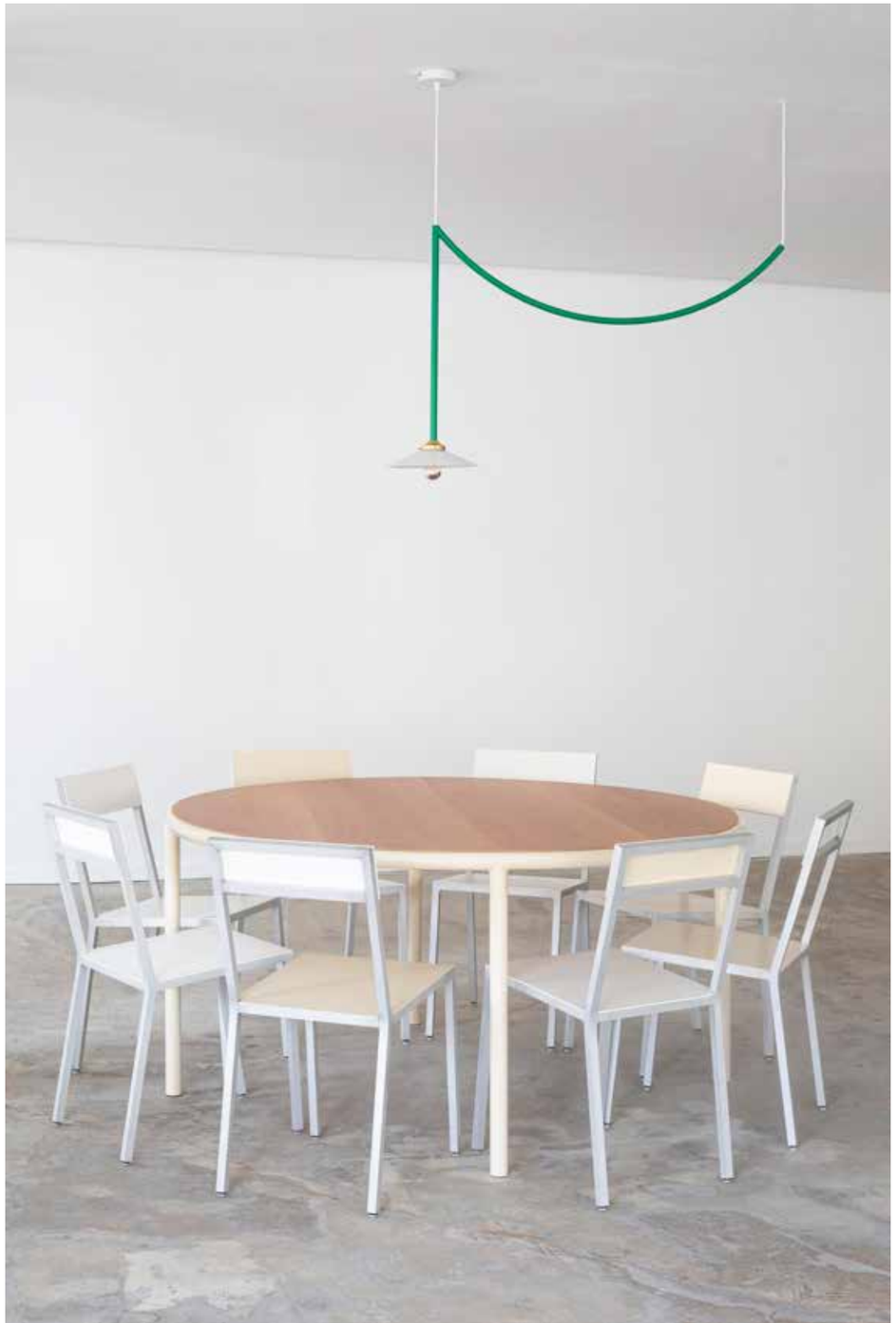

wooden table
— cherry round 150 ivory
— walnut round 150 black

valerie_objects_wooden table

wooden table
— oak rectangular 240 black

valerie_objects_wooden table

alu chairs by
muller van severen

alu chairs 13 different colour combinations & one version in oak wood

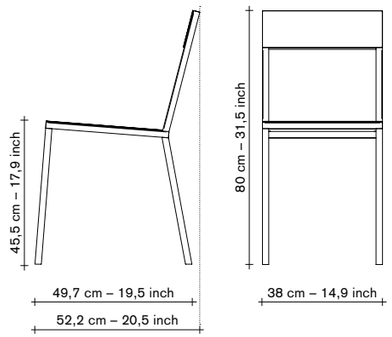

valerie_objects_alu collection

alu chairs
ivory / white

alu chair
ivory, ivory
white, ivory
ivory, white
white, white

valerie_objects_alu collection

round
table S
aluminium

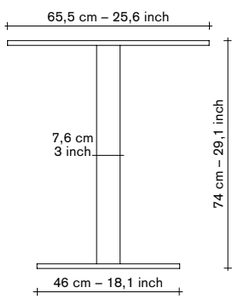

round table S
aluminium

round table S by
muller van severen

we immediately want to see how a piece looks and get a sense of its proportions. We want to see how humans relate to the object. So most of the time, we work live.

muller
van severen

valerie_objects_alu collection

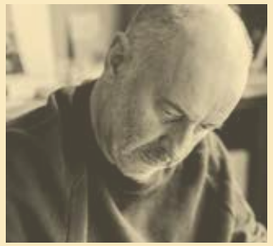

Robbrecht en Daem architecten was established in 1975 by Paul Robbrecht and Hilde Daem. The agency has created and completed a diverse range of projects. The interplay between architectural design and the visual arts is a unifying theme in their body of work. They designed structures for performing arts and music halls. Even their scientific-technical designs, like the laboratories, juxtapose constructions with contemporary art. Robbrecht en Daems architecture establishes a contemporary and humane position, with constructions making statements in a broad cultural context of science and art. Since 2002 Johannes Robbrecht joined the team, he is partner since 2012. Robbrecht en Daem architects is now an office with 35 employees. —

photos by Johannes Robbrecht

robbrecht en daem architecten

In 2009, Robbrecht en Daem architects had an exhibition at Bozar with scenographic furniture. The expo was travelling to London and Johannesburg, so the architects came up with folding tables that make it easier for visitors to look at drawings, sketches and texts. “This is micro-architecture. A folding table is invisible, but it can be unpacked and used immediately. For valerie_ objects, the ta tisch table is finished in dark polished massive wood or birch plywood in different coloured finishings.

valerie_objects_robbrecht en daem architecten

ta tisch

ta tisch by
robbrecht en daem architecten

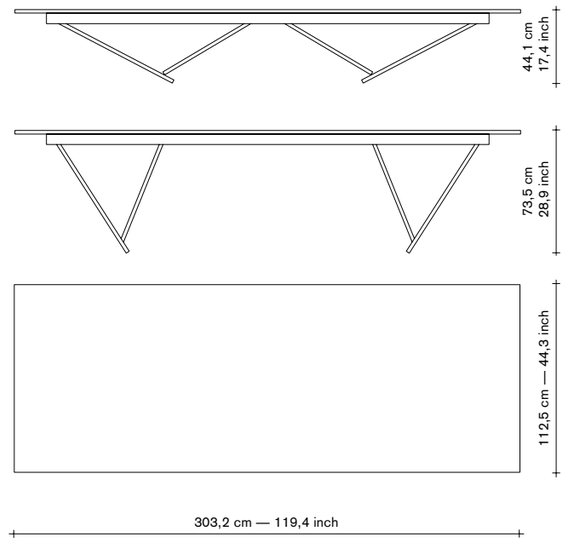

ta tisch
massive
blue surface

valerie_objects_ta tisch

ta tisch by
robbrecht en daem architecten

ta tisch
blue side edge

photography by Athos Burez

valerie_objects_ta tisch

technical sheets

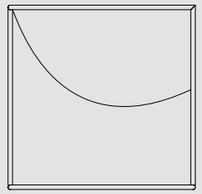

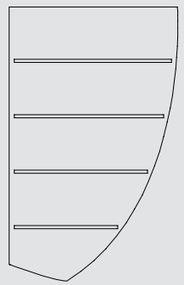

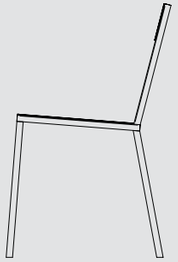

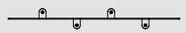

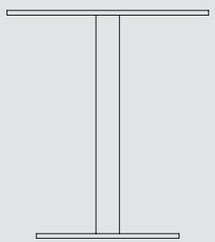

round wooden table

**wooden table —
for indoor use**

material:
1— steel tube frame diameter 40mm rolled and welded in red / green / ivory / black
2— 18mm birch plywood with top veneer, there are four options: birch / oak / walnut / cherry
The top consists of 70% PEFC certified materials. Coated in matt natural lacquer varnish / UV-resistant.

two different options:
round 120 /150

packaging
the tabletop and frame are packed separately and delivered as two parts: the tabletop is to be assembled by the customer. The tabletop is mounted on the steel frame with M6 bolts. (M6 bolts included / Hexagon socket wrench SW4 not included).

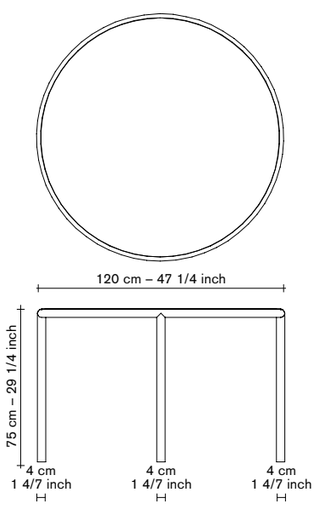

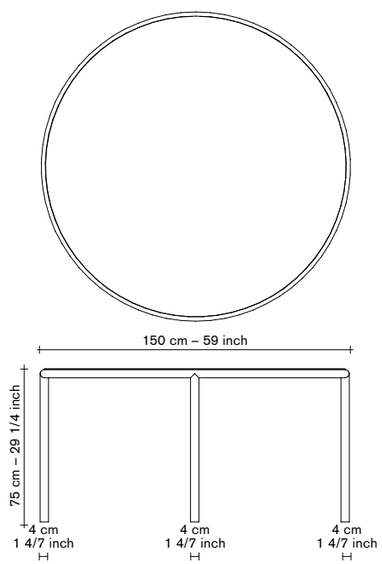

wooden table
by muller van severen

round wooden table

	finishing / size	
V9020700	birch — green	120
V9020716	birch — green	150

	finishing / size	
V9020701	walnut — green	120
V9020717	walnut — green	150

	finishing / size	
V9020702	oak — green	120
V9020718	oak — green	150

	finishing / size	
V9020703	cherry — green	120
V9020719	cherry — green	150

wooden table
by muller van severen

finishing / size		
V9020704	birch — ivory	120
V9020720	birch — ivory	150

finishing / size		
V9020705	walnut — ivory	120
V9020721	walnut — ivory	150

finishing / size		
V9020706	oak — ivory	120
V9020722	oak — ivory	150

finishing / size		
V9020707	cherry — ivory	120
V9020723	cherry — ivory	150

wooden table
by muller van severen

finishing / size		
V9020708	birch — red	120
V9020724	birch— red	150

finishing / size		
V9020709	walnut — red	120
V9020725	walnut— red	150

finishing / size		
V9020710	oak — red	120
V9020726	oak — red	150

finishing / size		
V9020711	cherry — red	120
V9020727	cherry — red	150

wooden table
by muller van severen

wooden table
by muller van severen

finishing / size

V9020712	birch — black	120
V9020728	birch — black	150

finishing / size

V9020713	walnut — black	120
V9020729	walnut — black	150

finishing / size

V9020714	oak — black	120
V9020730	oak — black	150

finishing / size

V9020715	cherry — black	120
V9020731	cherry — black	150

rectangler wooden table

**wooden table —
for indoor use**

material:
1— steel tube frame diameter 40mm rolled and welded in red / grey green / ivory / black
2— 18mm birch plywood with top veneer, there are four options: birch / oak / walnut / cherry
The top consists of 70% PEFC certified materials. Coated in matt natural lacquer varnish / UV-resistant.

two different options:
1— rectangler 240
2— rectangler 300
rectangler 300 only available in black and grey

packaging
the tabletop and frame are packed separately and delivered as two parts: the tabletop is to be assembled by the customer. The tabletop is mounted on the steel frame with M6 bolts. (M6 bolts included / Hexagon socket wrench SW4 not included).

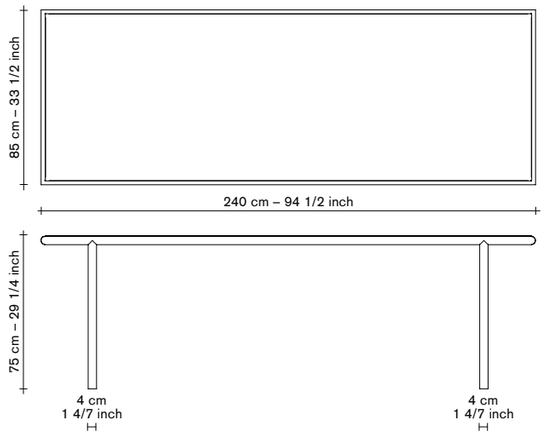

rectangular 240 wooden table

	finishing	
V9020732	birch — green	240

	finishing	
V9020733	walnut — green	240

	finishing	
V9020734	oak — green	240

	finishing	
V9020735	cherry — green	240

wooden table
by muller van severen

	finishing	
V9020736	birch — ivory	240

	finishing	
V9020737	walnut — ivory	240

	finishing	
V9020738	oak — ivory	240

	finishing	
V9020739	cherry — ivory	240

wooden table
by muller van severen

	finishing	
V9020740	birch— red	240

	finishing	
V9020741	walnut— red	240

	finishing	
V9020742	oak— red	240

	finishing	
V9020743	cherry — green	240

wooden table
by muller van severen

	finishing	
V9020744	birch — black	240

	finishing	
V9020745	walnut — black	240

	finishing	
V9020747	oak — black	240

	finishing	
V9020748	cherry — black	240

wooden table
by muller van severen

rectangular 300 wooden table

	finishing	
V9020764	oak — black	300

	finishing	
V9020765	walnut — black	300

	finishing	
V9020766	oak — grey	300

	finishing	
V9020767	walnut — grey	300

oval wooden table

**wooden table —
for indoor use**

material:
1— steel tube frame diameter 40mm rolled and welded in red / green / ivory / black
2— 18mm birch plywood with top veneer, there are four options: birch / oak / walnut / cherry
The top consists of 70% PEFC certified materials. Coated in matt natural lacquer varnish / UV-resistant.

one size:
—oval 210

packaging
the tabletop and frame are packed separately and delivered as two parts: the tabletop is to be assembled by the customer. The tabletop is mounted on the steel frame with M6 bolts. (M6 bolts included / Hexagon socket wrench SW4 not included).

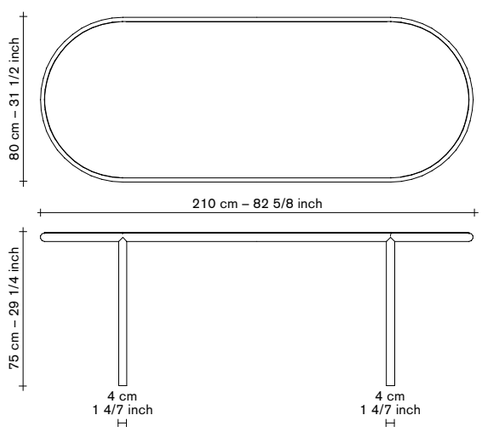

wooden table
by muller van severen

oval wooden table

	finishing	
V9020748	birch — green	240

	finishing	
V9020749	walnut — green	240

	finishing	
V9020750	oak — green	240

	finishing	
V9020751	cherry — green	240

wooden table
by muller van severen

finishing

V9020752 birch — ivory

finishing

V9020753 walnut — ivory

finishing

V9020754 oak— ivory

finishing

V9020755 cherry — ivory

wooden table
by muller van severen

finishing

V9020756 birch— red

finishing

V90207457 walnut — red

finishing

V9020758 oak — red

finishing

V9020759 cherry — red

finishing

V9020760 birch — black

finishing

V9020761 walnut — black

finishing

V9020762 oak — black

finishing

V9020763 cherry — black

alu chair

**alu chair —
for indoor and outdoor use**

material:
100% aluminium chairframe in square aluminium tube 20x20 mm / seat and back in aluminium sheet 3 mm.
two options for the chair frame:
1— natural aluminium, manually grinded showing the beauty of alumumium.
2— powder coated with uv protective matt transparent varnish.

13 colour combinations and one version in oak wood: for seat and back
1— all powder coated with uv-protective laquer. The textures of the laquer vary from to glossy candy colours to textured ral-colours.
2— oak wood: 4 mm brich blywood with top veneer oak. the top of 70% PEFC certified materials. Coated in matt natural lacquer varnish / UV rasistant
indoor use only.

glides
in polyethelene.

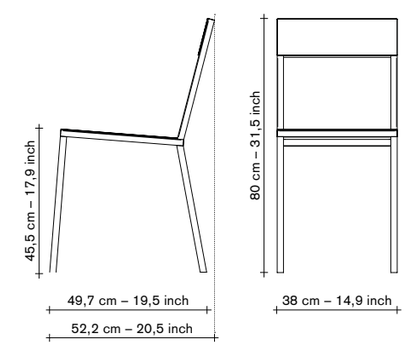

alu chair

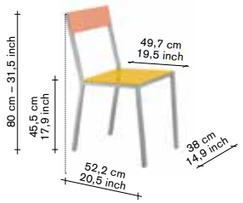

V9016035A

finishing / colours
- aluminium - frame
- yellow - seat
- pink - back

V9016035B

finishing / colours
- aluminium - frame
- white - seat
- yellow - back

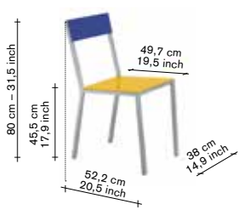

V9016035C

finishing / colours
- aluminium - frame
- yellow - seat
- candy blue - back

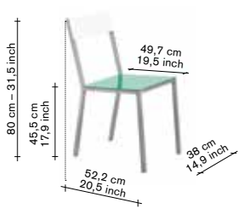

V9016035D

finishing / colours
- aluminium - frame
- green - seat
- white - back

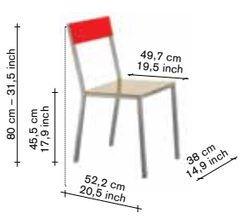

V9016035E

finishing / colours
- aluminium - frame
- curry - seat
- red - back

alu chair
by muller van severen

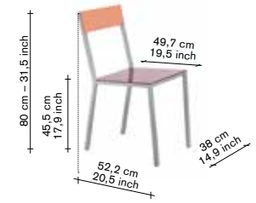

V9016035F

finishing / colours
- aluminium - frame
- burgundy - seat
- pink - back

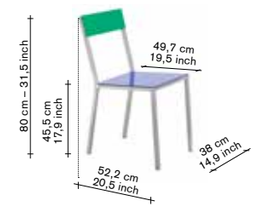

V9016035K

finishing / colours
- aluminium - frame
- dark blue - seat
- green - back

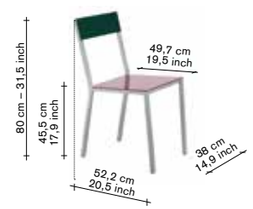

V9016035L

finishing / colours
- aluminium - frame
- burgundy - seat
- candy green - back

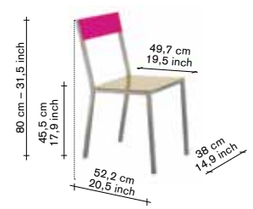

V9016035M

finishing / colours
- aluminium - frame
- curry - seat
- candy purple - back

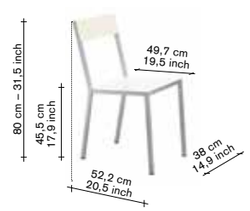

V9016035G

finishing / colours
- aluminium - frame
- white - seat
- ivory - back

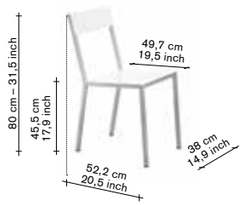

V9016035O

finishing / colours

- aluminium - frame
- white - seat
- white - back

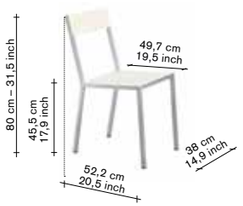

V9016035P

finishing / colours

- aluminium - frame
- ivory - seat
- ivory - back

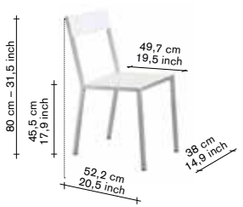

V9016035Q

finishing / colours

- aluminium - frame
- ivory - seat
- white - back

alu chair — oak wood (indoor use only)

V90211001

finishing / colours

- oak - seat
- oak - back

round table S

**round table S —
for indoor and outdoor use**

material:
100% aluminium
— tabletop in aluminium sheet 15 mm.
— outer column in extruded aluminium tube 76 mm.
— tablefoot in aluminium sheet 15 mm.

option:
manually grinded surface showing the beauty of aluminium, protected with beeswax (this natural protection needs to be done regularly to be outdoor protected).

glides
in polyethelene.

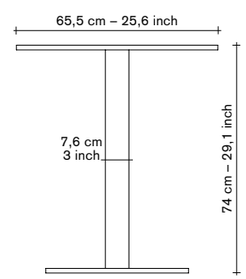

colours — round table S

aluminium — V9016034A

ta tisch

ta tisch —

material:
table blue side edges
— core material:
birch plywood with
pre-treated melamine
surface 21 mm.
— color of plywood
surface: dark brown.
— all side edges: blue
stained birch plywood
protected with natural oil.

material:
blue surface
— core material:
birch plywood with
pre-treated melamine
surface 21 mm.
— color of plywood
surface: dark brown.
— all side edges: birch
plywood protected with
natural oil.
— tablesurface: matt wet
lacquer light blue.

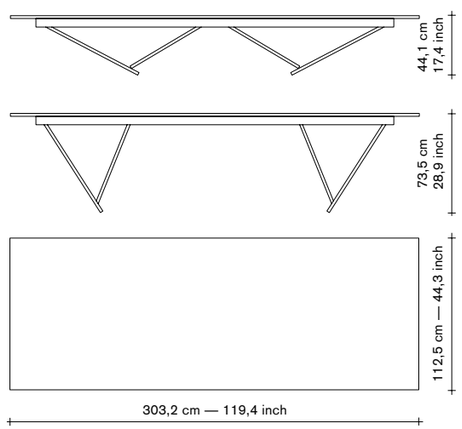

colour combinations — ta tisch

	board	surface	seat surface	surface
blue edge V6016002B	melamine playwood	dark brown	dark brown	blue stained
blue surface V6016002C	melamine playwood	dark brown	blue lacquered	natural coloured

contact

Veldkant 21
2550 Kontich — Belgium

T +32 3 458 05 82
F +32 3 458 05 84
info@valerie-objects.com

_general manager
Stephanie Rosseel
stephanie@valerie-objects.com
+32 499 40 18 74
—
press@valerie-objects.com
—
_art direction
Veerle Wenes
_product development
Jan Aerts
—
product sheets available
media.valerie-objects.com

more collections

_furniture seating + shelving
muller van severen /destroyers builders

_lighting
muller van severen

_accessories
muller van severen / chris kabel / studio wieki somers / destroyers builders

_tableware
maarten baas / glenn sestig

_cutlery
maarten baas / koichi futatsumata / nendo

_pepper & salt
nendo / muller van severen / maarten baas / studio wieki somers / knutson & ballouhey

_handwoven carpets
ivy / fran / lucy / frenzy / billie TheAlfredCollection

_photography
Siska Vandecasteele
_graphic identity
maff.be

All rights are reserved. No part of this publication may be reproduced, stored in a retrieval system or transmitted in any form or by any means, without the prior written consent of the publisher. An exeption is made for short excerpts which may be cited for the sole purpose of reviews.